THE BEST SUPPORT
FOR YOUR AV & IT HARDWARE
T: + 31(0)23-5478888 | E: info@newstar.eu | W: www.newstar.eu

PLASMA-W840 NEWSTAR FLAT SCREEN WALL MOUNT

Newstar TV/Monitor Ultrathin Wall Mount (fixed) for 23"-52" Screen - Black

SPECIFICATIONS

Color	Black
Distance to wall	1,5 - 3 cm
Height adjustment	None
Max. screen size	52
Max. weight	50
Min. screen size	23
Min. weight	0
Screens	1
Type	Fixed
VESA maximum	400x400 mm
VESA minimum	100x100 mm
Warranty	5 year
EAN code	8717371442545

The NewStar wall mount, model PLASMA-W840 is a fixed wall mount for flat screens up to 52" (132 cm). This mount is a great choice when you want the ultimate viewing flexibility with your flat screen. Depth of this mount is 1,5 to 3 centimetres.

NewStar PLASMA-W840 is suitable for screens up to 52" (132 cm). The weight capacity of this product is 50 kg each screen. The wall mount is suitable for screens that meet VESA hole pattern 100x100 to 400x400mm. Different hole patterns can be covered using NewStar VESA adapter plates.

Create a clean design ambiance for your flat screen TV in the living room, bedroom or home cinema.

All installation material is included with the product.

NewStar Products Europe B.V.
Wateringweg 62/B
2031 EJ HAARLEM
THE NETHERLANDS

Phone : +31(0)23-5478888
Fax : +31(0)23-5478889
Email : info@newstar.nl
Website : www.newstar.eu

NewStar cannot be held liable for any inaccuracies and copyrights.
No part of this publication may be reproduced and/or published by print, photocopy, microfilm or in any other way, without prior written permission of NewStar Computer Products Europe BV.

PLASMA-W840 NEWSTAR FLAT SCREEN WALL MOUNT

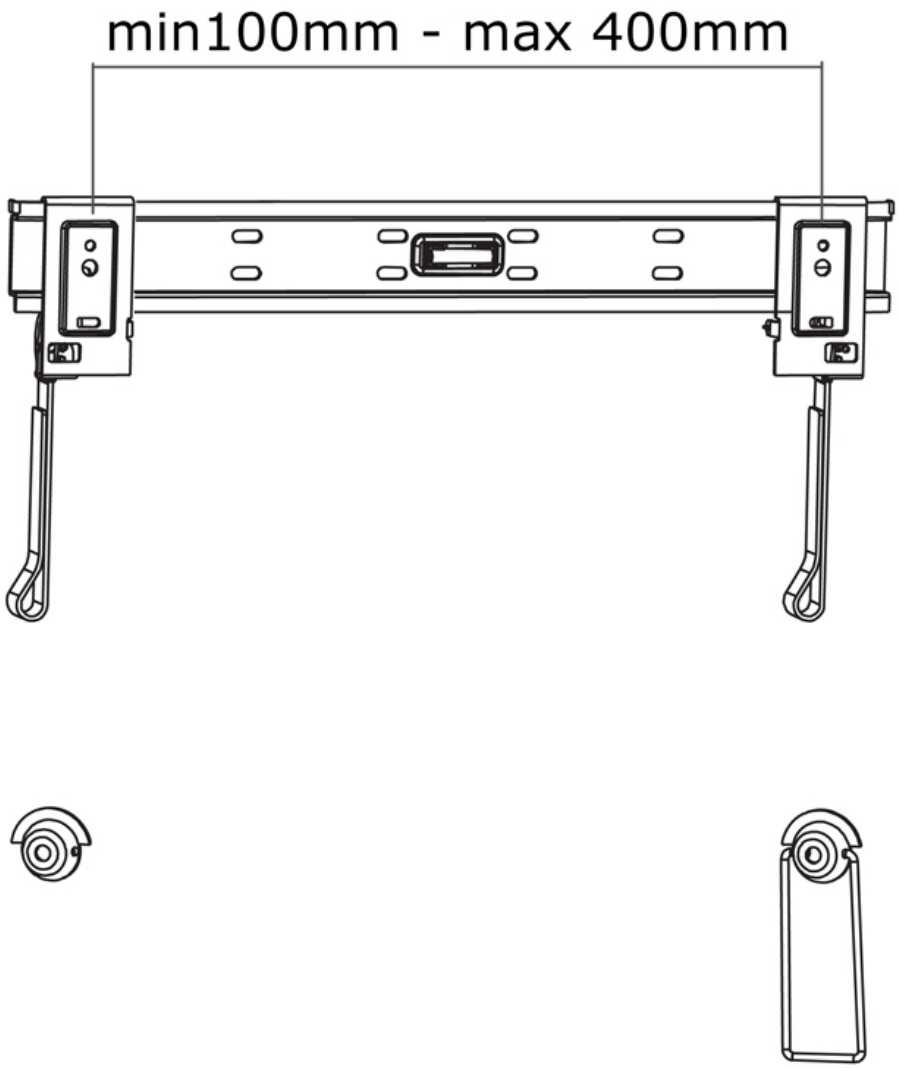

NewStar Products Europe B.V.
Wateringweg 62/B
2031 EJ HAARLEM
THE NETHERLANDS

Phone : +31(0)23-5478888
Fax : +31(0)23-5478889
Email : info@newstar.nl
Website : www.newstar.eu

NewStar cannot be held liable for any inaccuracies and copyrights.
No part of this publication may be reproduced and/or published by print, photocopy, microfilm or in any other way, without prior written permission of NewStar Computer Products Europe BV.