THE BEST SUPPORT
FOR YOUR AV & IT HARDWARE
T: + 31(0)23-5478888 | E: info@newstar.eu | W: www.newstar.eu

NM-D335DBLACK NEWSTAR FLAT SCREEN DESK MOUNT

Newstar Tilt/Turn/Rotate Dual Desk Mount (stand, clamp & grommet) for two 10-27" Monitor Screens, Height Adjustable - Black

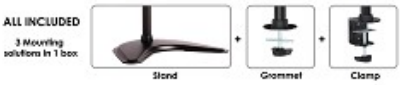

SPECIFICATIONS

Color	Black
Depth	8 cm
Desk mount	Grommet Clamp Stand
Height	0 - 45 cm
Height adjustment	Manual
Max. screen size	27
Max. weight	8
Min. screen size	10
Min. weight	0
Rotate (degrees)	360°
Screens	2
Swivel (degrees)	90°
Tilt (degrees)	90°
Type	Tilt Rotate Turn Full motion
VESA maximum	100x100 mm
VESA minimum	75x75 mm
Warranty	5 year
EAN code	8717371445386

The NewStar desk mount, model NM-D335DBLACK is a tilt-, swivel and rotatable desk mount for 2 flat screens up to 27”. This mount is a great choice for space saving placement on desks using a desk clamp, desk stand or desk grommet.

NewStar's versatile tilt (90°), rotate (360°) and swivel (30°) technology allows the mount to change to any viewing angle to fully benefit from the capabilities of the flat screen. The mount is manually height adjustable from 0 to 45 centimetres. An innovative cable management conceals and routes cables from mount to flat screen. Hide your cables to keep the workplace nice and tidy.

NewStar NM-D335DBLACK has one pivot point and is suitable for screens up to 27" (69 cm). The weight capacity of this product is 8 kg each screen. The desk mount is suitable for screens that meet VESA hole pattern 75x75 or 100x100mm. Different hole patterns can be covered using NewStar VESA adapter plates.

By using an ergonomic mount neck- and back complaints can be avoided. Ideal for use in offices and on counters or in a reception area.

All installation material is included with the product.

NewStar Products Europe B.V.
Wateringweg 62/B
2031 EJ HAARLEM
THE NETHERLANDS

Phone : +31(0)23-5478888
Fax : +31(0)23-5478889
Email : info@newstar.nl
Website : www.newstar.eu

NewStar cannot be held liable for any inaccuracies and copyrights.
No part of this publication may be reproduced and/or published by print, photocopy, microfilm or in any other way, without prior written permission of NewStar Computer Products Europe BV.

NM-D335DBLACK NEWSTAR FLAT SCREEN DESK MOUNT

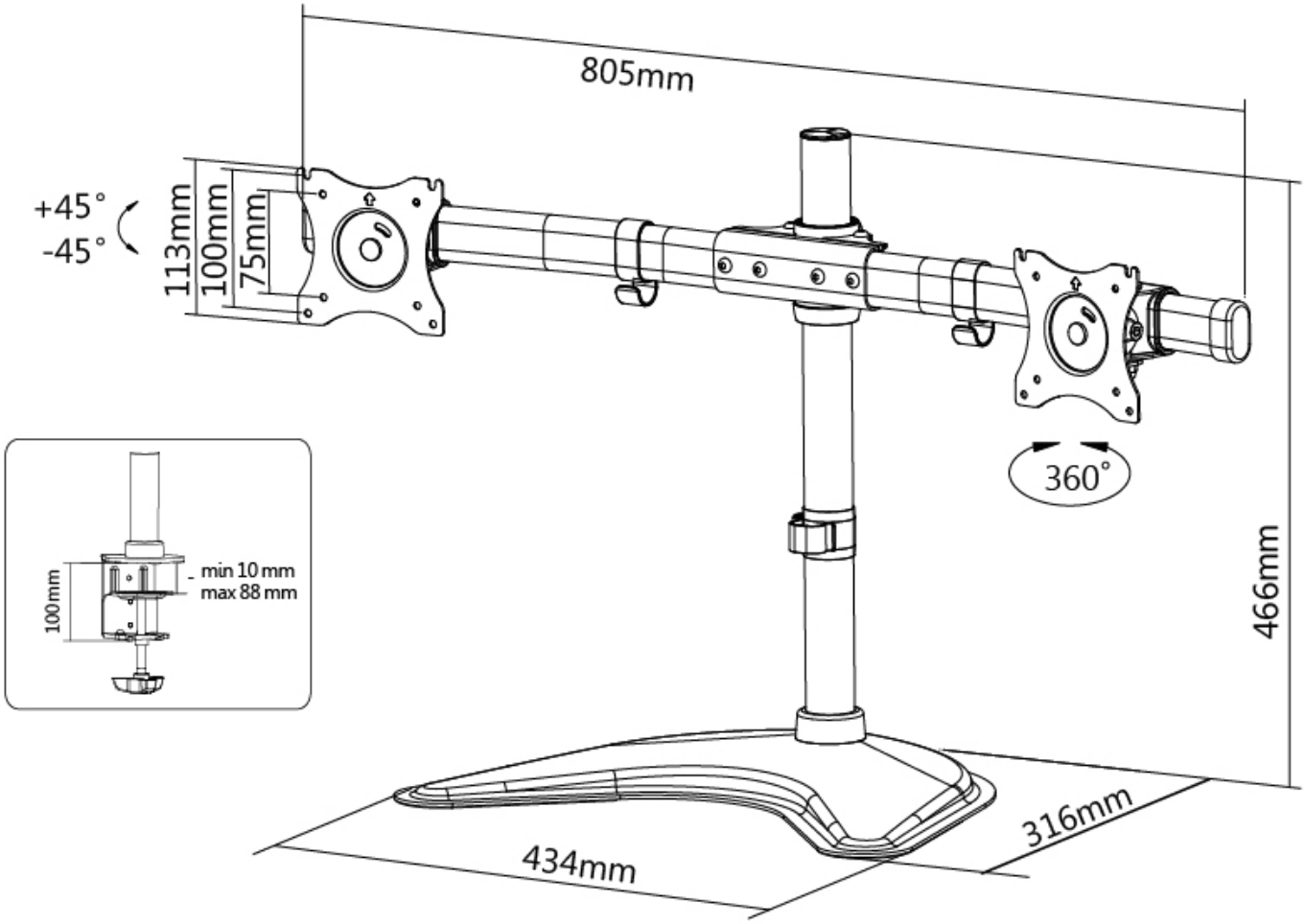

NewStar Products Europe B.V.
Wateringweg 62/B
2031 EJ HAARLEM
THE NETHERLANDS

Phone : +31(0)23-5478888
Fax : +31(0)23-5478889
Email : info@newstar.nl
Website : www.newstar.eu

NewStar cannot be held liable for any inaccuracies and copyrights.
No part of this publication may be reproduced and/or published by print, photocopy, microfilm or in any other way, without prior written permission of NewStar Computer Products Europe BV.