DATASHEET

RJ45 Patch cable S/FTP, Cat. 6A, grey

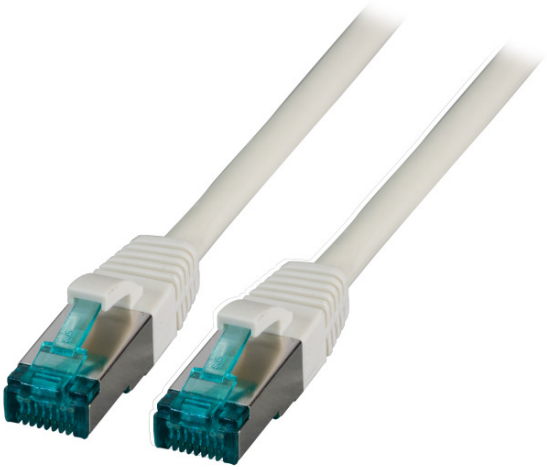

Cat.6A | 10 Gbit
500 MHz | 100% CU

Description

The shielded Cat.6A RJ45 patch cable with ensures excellent performance for **10 Gigabit** Ethernet applications. The moulded grommet captivates with its **slim design** and thus simplifies the insertion process in cramped conditions.

Cross section 4 x 2 x AWG27/7
Length imprint on boot
Available in **8 colours**

General data	
Category	6A (TIA)
Type of connector connection 1	RJ45 8(8)
Type of connector connection 2	RJ45 8(8)
Connector type	RJ45 Standard green
Contacts	Gold plated
Pin assignment	1:1
Allocation	acc. TIA/EIA 568B
Type	Shielded
Length imprint	Yes
Anti-kink sleeve	moulded
Colour anti-kink sleeve	grey
Locking lever	Yes

This datasheet was created automatically on 03-03-2021 . Technical changes reserved.

EFB-Elektronik GmbH
Striegauer Straße 1
33719 Bielefeld

fon: +49 521 40 41 8-0
fax: +49 521 40 41 8-50

info@efb-elektronik.de
www.efb-elektronik.de

WIR SORGEN FÜR VERBINDUNG
WE CARE FOR CONNECTION

DATASHEET

RJ45 Patch cable S/FTP, Cat. 6A, grey

General data	
UL approbated	No

Mechanical characteristics	
Mating cycles	≥750
Bending radius	>30 mm
Conductive shield	Selected shield contact

Cable construction

Raw cable	Cat.6A
Cable structure	S/FTP
Total screening	80 %
Cable construction	4x2
AWG-size/strands per core	27/7
Conductor Material	Copper

Cable sheath

Silicone-free	Yes
Jacket material	LSZH
Colour outer sheath	grey
Printing	Cat.6A PATCH S/FTP 4x2xAWG27/7 LSZH ISO/IEC11801 ANSI/TIA-568-C.2 ***10Gigabit Ethernet***
Outer diameter of the cable	6.0 mm
Flame-retardant	Yes
Halogen-free	Yes
Low smoke	Yes

Environmental conditions	
Temperature range	-20 – 60 °C

Electrical characteristics	
NVP value	74 %
Impedance	100 ±15 Ω
Conductor resistance DC	185 Ω/km
Loop resistance	370 Ω/km
Resistance unbalance	3 %
Insulation resistance	10 MΩ
Contact resistance	30 mΩ
Test voltage	1000 (V DC, 1min) core/core und core/screen

This datasheet was created automatically on 03-03-2021 . Technical changes reserved.

EFB-Elektronik GmbH
Striegauer Straße 1
33719 Bielefeld

fon: +49 521 40 41 8-0
fax: +49 521 40 41 8-50

info@efb-elektronik.de
www.efb-elektronik.de

WIR SORGEN FÜR VERBINDUNG
WE CARE FOR CONNECTION

DATASHEET

RJ45 Patch cable S/FTP, Cat. 6A, grey

Electrical characteristics	
POE class	PoE acc. to IEEE802.3af;PoE+ acc. to IEEE802.3at;4PPoE acc. to IEEE802.3bt

Transmission characteristics	
Bandwidth	500MHz
Transmission	10Gbit

Standards, approvals, certifications	
Connector	IEC 60603-7-51

Available variants

Article no.	Title	Length
MK6001.0,15G	RJ45 Patch cable S/FTP, Cat.6A, LSZH, 0.15m, grey	0.15 m
MK6001.0,25G	RJ45 Patch cable S/FTP, Cat.6A, LSZH, 0.25m, grey	0.25 m
MK6001.0,5G	RJ45 Patch cable S/FTP, Cat.6A, LSZH, 0.5m, grey	0.5 m
MK6001.1G	RJ45 Patch cable S/FTP, Cat.6A, LSZH, 1m, grey	1.0 m
MK6001.1,5G	RJ45 Patch cable S/FTP, Cat.6A, LSZH, 1.5m, grey	1.5 m
MK6001.2G	RJ45 Patch cable S/FTP, Cat.6A, LSZH, 2m, grey	2.0 m
MK6001.3G	RJ45 Patch cable S/FTP, Cat.6A, LSZH, 3m, grey	3.0 m
MK6001.5G	RJ45 Patch cable S/FTP, Cat.6A, LSZH, 5m, grey	5.0 m
MK6001.7,5G	RJ45 Patch cable S/FTP, Cat.6A, LSZH, 7.5m, grey	7.5 m
MK6001.10G	RJ45 Patch cable S/FTP, Cat.6A, LSZH, 10m, grey	10.0 m
MK6001.15G	RJ45 Patch cable S/FTP, Cat.6A, LSZH, 15m, grey	15.0 m
MK6001.20G	RJ45 Patch cable S/FTP, Cat.6A, LSZH, 20m, grey	20.0 m
MK6001.25G	RJ45 Patch cable S/FTP, Cat.6A, LSZH, 25m, grey	25.0 m
MK6001.30G	RJ45 Patch cable S/FTP, Cat.6A, LSZH, 30m, grey	30.0 m
MK6001.40G	RJ45 Patch cable S/FTP, Cat.6A, LSZH, 40m, grey	40.0 m
MK6001.50G	RJ45 Patch cable S/FTP, Cat.6A, LSZH, 50m, grey	50.0 m

This datasheet was created automatically on 03-03-2021 . Technical changes reserved.

EFB-Elektronik GmbH
Striegauer Straße 1
33719 Bielefeld

fon: +49 521 40 41 8-0
fax: +49 521 40 41 8-50

info@efb-elektronik.de
www.efb-elektronik.de

WIR SORGEN FÜR VERBINDUNG
WE CARE FOR CONNECTION

DATASHEET

RJ45 Patch cable S/FTP, Cat. 6A, grey

Technical drawings

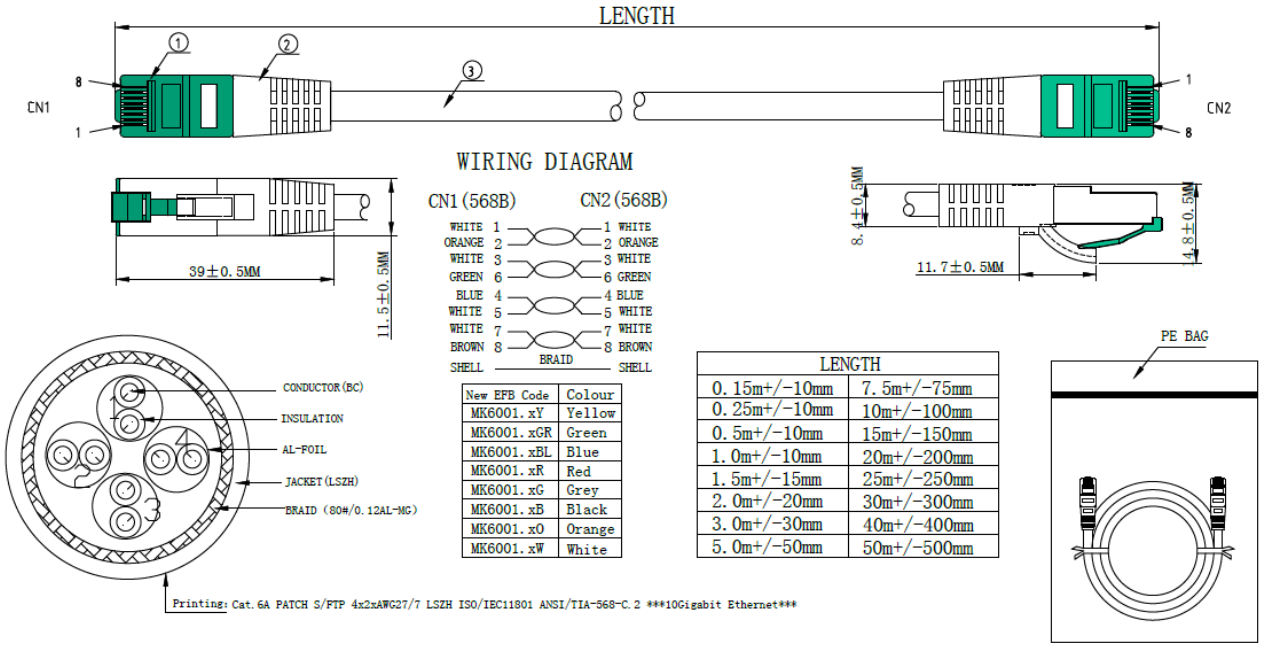

New EFB Code	Colour
MK6001.xY	Yellow
MK6001.xGR	Green
MK6001.xBL	Blue
MK6001.xR	Red
MK6001.xG	Grey
MK6001.xB	Black
MK6001.xO	Orange
MK6001.xW	White

LENGTH	
0.15m+/−10mm	7.5m+/−75mm
0.25m+/−10mm	10m+/−100mm
0.5m+/−10mm	15m+/−150mm
1.0m+/−10mm	20m+/−200mm
1.5m+/−15mm	25m+/−250mm
2.0m+/−20mm	30m+/−300mm
3.0m+/−30mm	40m+/−400mm
5.0m+/−50mm	50m+/−500mm

similar product

MK6001.1W	RJ45 Patch cable S/FTP, Cat. 6A, white
MK6001.1O	RJ45 Patch cable S/FTP, Cat. 6A, orange
MK6001.1GR	RJ45 Patch cable S/FTP, Cat. 6A, green
MK6001.1R	RJ45 Patch cable S/FTP, Cat. 6A, red
MK6001.1BL	RJ45 Patch cable S/FTP, Cat. 6A, blue
MK6001.1Y	RJ45 Patch cable S/FTP, Cat. 6A, yellow
MK6001.1B	RJ45 Patch cable S/FTP, Cat. 6A, black

This datasheet was created automatically on 03-03-2021 . Technical changes reserved.

EFB-Elektronik GmbH
Striegauer Straße 1
33719 Bielefeld

fon: +49 521 40 41 8-0
fax: +49 521 40 41 8-50

info@efb-elektronik.de
www.efb-elektronik.de

WIR SORGEN FÜR VERBINDUNG
WE CARE FOR CONNECTION